Product name: **Concealed faucet Kubo-2F-Ultra**
Product Code: **PM0006**

RUBINETA

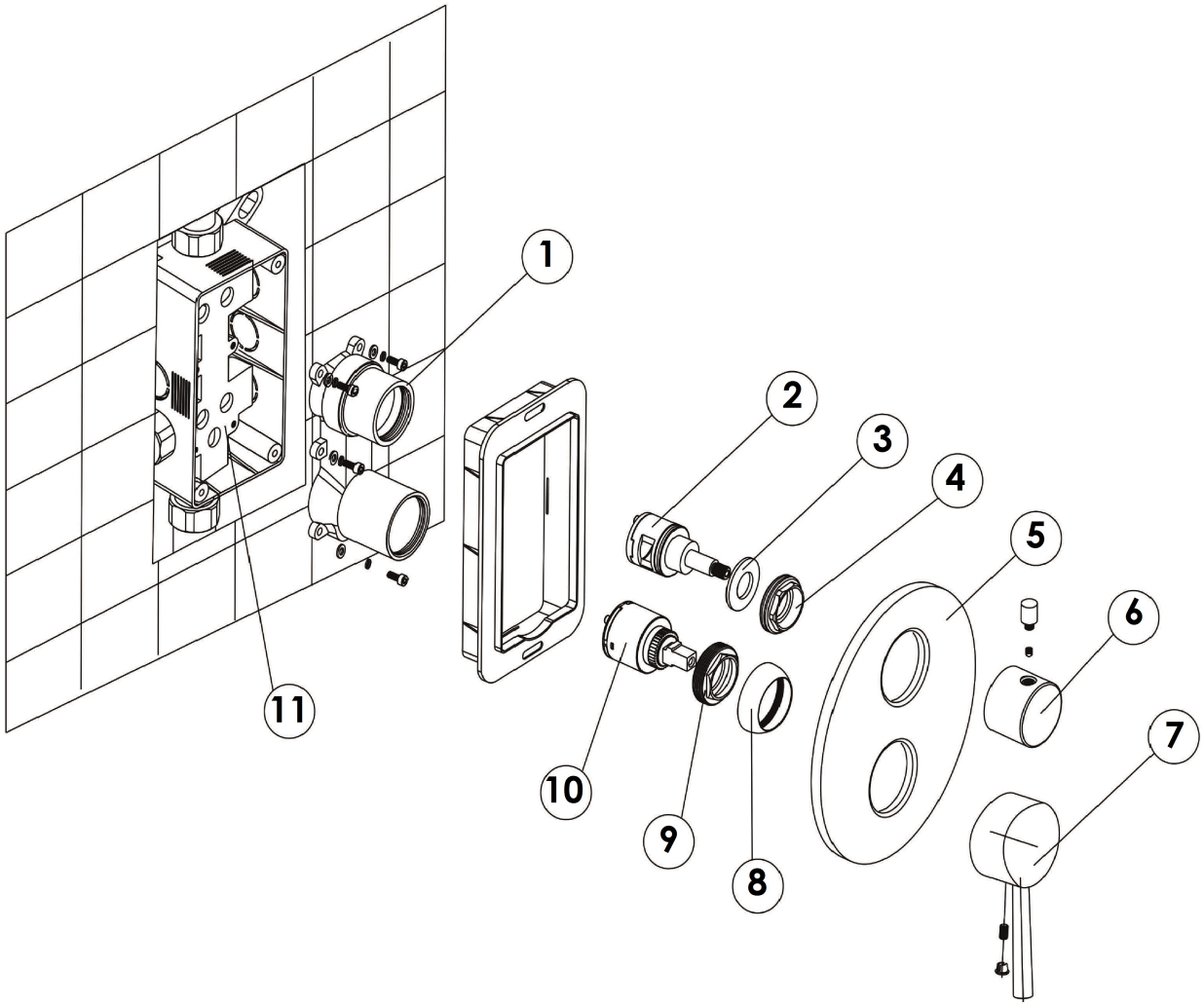

ITEM NO.	PART CODE	NAME	QUANTITY
1	635403	Concleadet faucet body 2F	1
2	636536	Diverter Kubo 2F	1
3	632125	Brass washer Kubo 2F	1
4	636371	Diverter nut Kubo 2F	1
5	636127	Decorative cover Kubo 2F	1
6	637039	Diverter handle Kubo 2F	1
7	631129	Handle Ultra 35 mm	1
8	636201	Cartridge cap 41 mm	1
9	636301	Nut for cartridge 35 mm	1
10	634004	Ceramic cartridge 35 mm	1
11	PM0014	Concealed faucet box Kubo-2F	1