Product name: **Faucet Ultra-32**
Product Code: **U32008**

RUBINETA

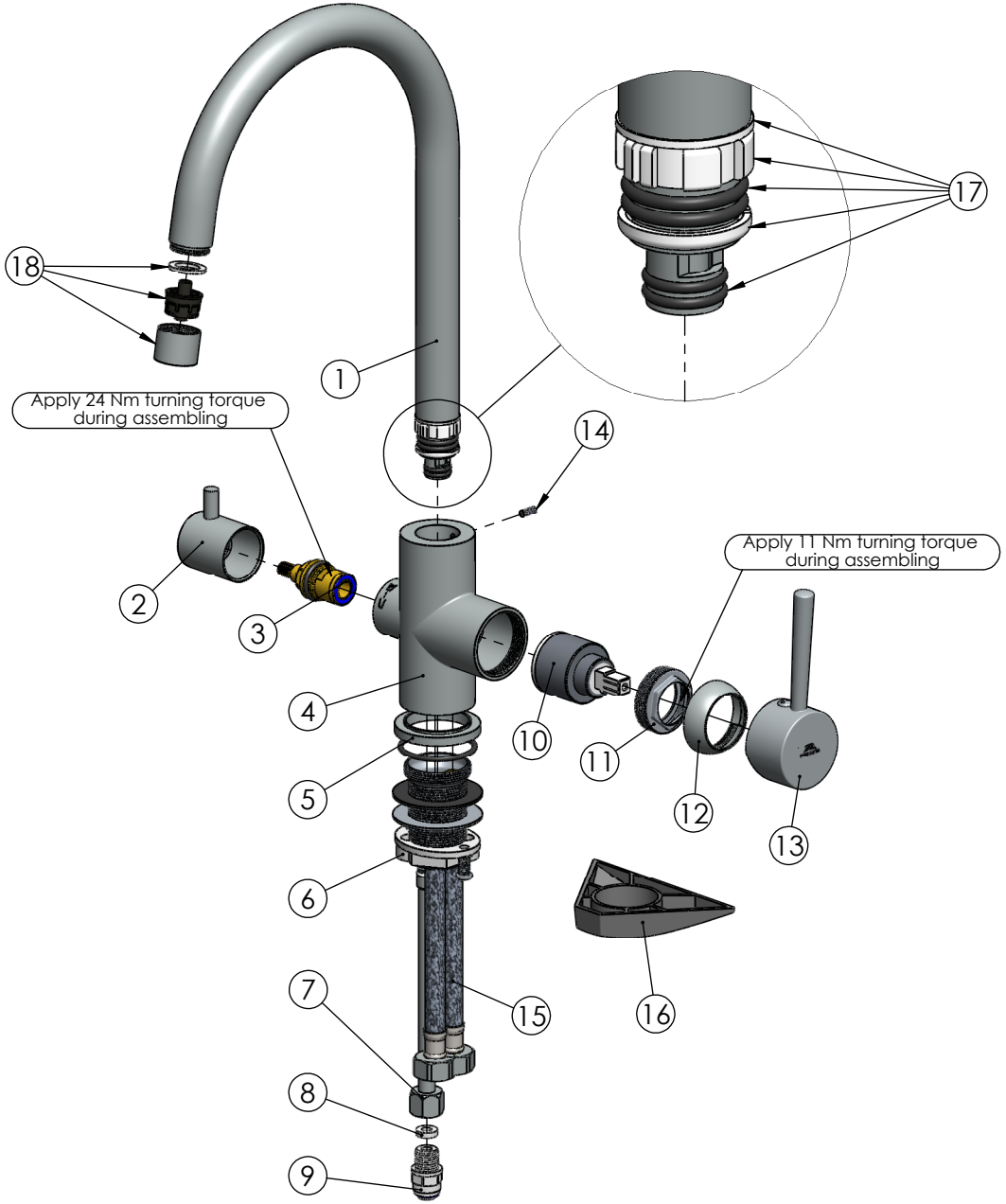

ITEM NO.	PART CODE	NAME	QTY.
1	633348	Spout Ultra-32	1
2	637120	Handle for valve Ultra-32	1
3	664149	Valve Ceramic 1/2 (8x20) 90	1
4	635450	Body Ultra-32	1
5	636053	Base Ultra-32	1
6	637119	Fixing set Ultra-32	1
7	662023	Tube M10x1-G1/4" (Ultra-32)	1
8	632173	Washer silicone 11.9x5.8x3.1	1
9	662126	Connector plastic G1/4" for purify faucet	1
10	634041	Cartridge 35mm Citec (grey)	1
11	636301	Nut for cartridge 35 mm	1
12	636201	Cartridge cap 41mm	1
13	631923	Handle Ultra-32	1
14	636330	Set screw M4x10	1
15	46381060	FLISTEX M10xF12-L060 Flex faucet's connector	2
16	637010	Fixing holder Aero-33	1
17	632190	Seals kit for spout Ultra-32 (7pcs)	1
18	636791	Aerator set for faucet Ultra-32	1